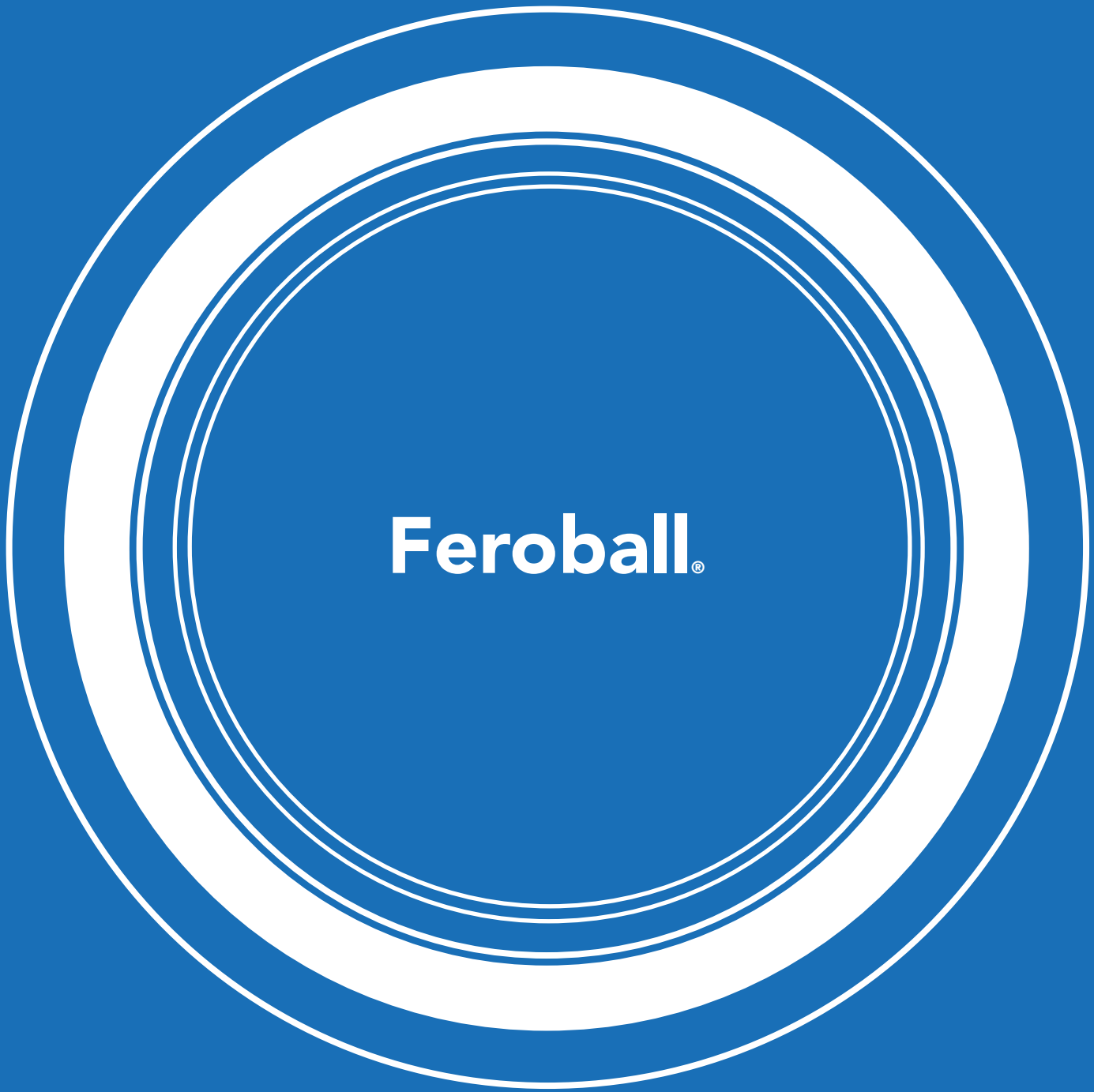
Feroball®

Many years of continuous research, development and application of engineering activities, have resulted in a spherical plain bearing that excels in high corrosion resistance and low stick-slip limits. Its open design gives the Feroball® spherical plain bearing a unique position in the market, no seals needed! The Feroball® spherical plain bearing is a low-maintenance product for use with or without grease.

www.feroball.com | info@feroball.com +31(0)85 487 4800

Gildenstraat 11B | 3861 RG Nijkerk

Luxury Yacht Applications

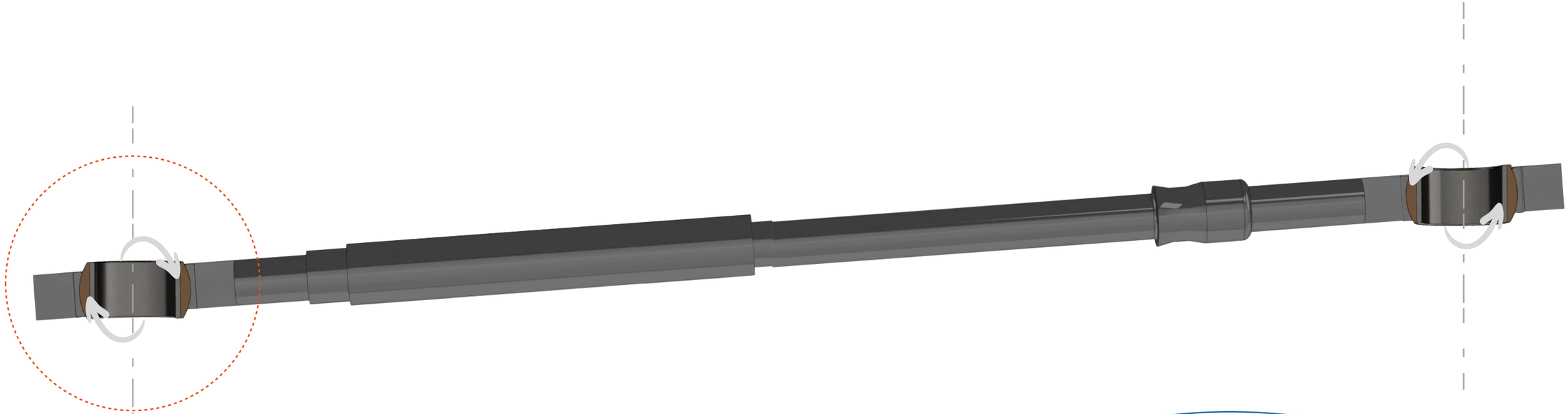

Feroball® spherical plain bearings

are standardized, mechanical components that enable multi-directional, self-aligning movements.
The inner ring-ball combination has a spherical convex outer diameter, while the outer ring has a correspondingly concave inner diameter.

	FBT				FBA	FBS	FBX	FBK
	ND & I	**HD**	**FW**	**HO**				
Self-lubricating performance	Good	Good	Good	Good	Restricted	Good	Good	Good
Maintenance-free operations	Good	Good	Good	Good	Poor	Restricted	Restricted	Restricted
Dirty environments	Good	Good	Good	Good	Good	Good	Good	Good
Corrosion-resistant	Good	Good	Good	Good	Good	Good	Good	Good
High temperature (max 100 °C)	Good	Good	Good	Good	Poor	Poor	Poor	Poor
Heavy load	Restricted	Good	Restricted	Restricted	Restricted	Restricted	Restricted	Restricted
Shock loads/vibrations	Poor	Poor	Poor	Poor	Poor	Poor	Poor	Poor
High sliding velocity	Restricted	Restricted	Restricted	Restricted	Restricted	Restricted	Restricted	Restricted
Low friction	Good	Good	Good	Good	Poor	Restricted	Restricted	Restricted
Poor shaft surface finish	Good	Good	Good	Good	Poor	Poor	Good	Poor
Small operating clearance	Good	Good	Good	Good	Restricted	Restricted	Restricted	Restricted
Insensitive to misalignment	Restricted	Restricted	Restricted	Restricted	Restricted	Restricted	Restricted	Restricted
Material	AISI 316L 1.4404/ Feroform T814	AISI 316L 1.4404/ Feroform T814	AISI 316L 1.4404/ Feroform T814	AISI 316L 1.4404/ Feroform T814	Ferform PR18/ Feroform PR18	AISI 316L 1.4404/ Feroform PR18	AISI 316L 1.4404/ Feroform PR18	Ferform PR18/ Feroform PR18
	Page 08	Page 14	Page 16	Page 16	Page 20	Page 26	Page 32	Page 33

FBT

Feroform T814, combined with stainless steel 316L (1.4404) inner- and outer-rings, results in the Feroball® FBT-series.
The FBT-series offers superior corrosion resistance over most other Cr-Ni bearings.
This FBT bearing is ideally suited to damp or wet environments, including both sweet and salt water.

Maintenance-free
Self lubricating Feroform T814 composite

Corrosion-resistance
Stainless steel 1.4404
For use in both dry and wet conditions

Superb
Low stick-slip limit

SPECS | FBT-ND

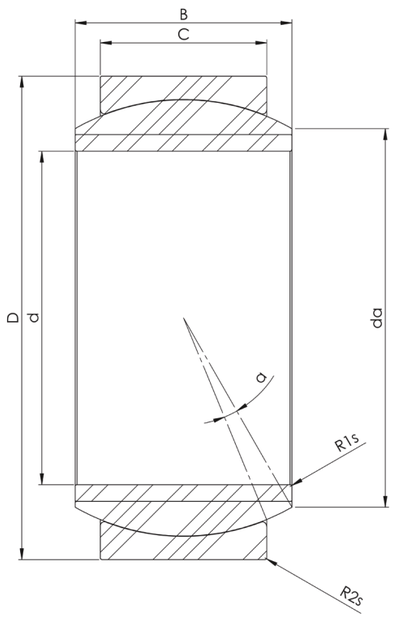

Shaft ø	Dimensions			
	d	d tolerance	D	D tolerance	B
FBT-20	20	0/-0,01	35,00	0/-0,011	16,00
FBT-25	25	0/-0,01	42,00	0/-0,011	20,00
FBT-30	30	0/-0,01	47,00	0/-0,011	22,00
FBT-35	35	0/-0,012	55,00	0/-0,013	25,00
FBT-40	40	0/-0,012	62,00	0/-0,013	28,00
FBT-45	45	0/-0,012	68,00	0/-0,013	32,00
FBT-50	50	0/-0,012	75,00	0/-0,013	35,00
FBT-60	60	0/-0,015	90,00	0/-0,015	44,00
FBT-70	70	0/-0,015	105,00	0/-0,015	49,00
FBT-80	80	0/-0,015	120,00	0/-0,015	55,00
FBT-90	90	0/-0,02	130,00	0/-0,018	60,00
FBT-100	100	0/-0,02	150,00	0/-0,018	70,00
FBT-110	110	0/-0,02	160,00	0/-0,025	70,00
FBT-120	120	0/-0,02	180,00	0/-0,025	85,00
FBT-140	140	0/-0,025	210,00	0/-0,03	90,00
FBT-160	160	0/-0,025	230,00	0/-0,03	105,00
FBT-180	180	0/-0,025	260,00	0/-0,035	105,00
FBT-200	200	0/-0,03	290,00	0/-0,035	130,00
FBT-220	220	0/-0,03	320,00	0/-0,04	135,00
FBT-240	240	0/-0,03	340,00	0/-0,04	140,00
FBT-260	260	0/-0,035	370,00	0/-0,04	150,00
FBT-280	280	0/-0,035	400,00	0/-0,04	155,00
FBT-300	300	0/-0,035	430,00	0/-0,045	165,00
FBT-320	320	0/-0,04	440,00	0/-0,045	160,00
FBT-340	340	0/-0,04	460,00	0/-0,045	160,00
FBT-360	360	0/-0,04	480,00	0/-0,045	160,00
FBT-380	380	0/-0,04	520,00	0/-0,05	190,00
FBT-400	400	0/-0,04	540,00	0/-0,05	190,00
FBT-420	420	0/-0,045	560,00	0/-0,05	190,00
FBT-440	440	0/-0,045	600,00	0/-0,05	218,00
FBT-460	460	0/-0,045	620,00	0/-0,05	218,00
FBT-480	480	0/-0,045	650,00	0/-0,075	230,00
FBT-500	500	0/-0,045	670,00	0/-0,075	230,00
FBT-530	530	0/-0,05	710,00	0/-0,075	243,00
FBT-560	560	0/-0,05	750,00	0/-0,075	258,00
FBT-600	600	0/-0,05	800,00	0/-0,075	272,00
FBT-630	630	0/-0,05	850,00	0/-0,1	300,00
FBT-670	670	0/-0,075	900,00	0/-0,1	308,00
FBT-710	710	0/-0,075	950,00	0/-0,1	325,00
FBT-750	750	0/-0,075	1.000,00	0/-0,1	335,00
FBT-800	800	0/-0,075	1.060,00	0/-0,125	335,00
FBT-850	850	0/-0,1	1.120,00	0/-0,125	365,00
FBT-900	900	0/-0,1	1.180,00	0/-0,125	375,00
FBT-950	950	0/-0,1	1.250,00	0/-0,125	400,00
FBT-1000	1000	0/-0,1	1.320,00	0/-0,16	438,00

							Maximum Static load (kN)	Maximum Dynamic load (kN)	
B tolerance	C	C tolerance	Dk	r1s	r2s	α	da	C0	C	Surface mm² (=C/220)
0/-0,12	12,00	0/-0,24	31,00	0,30	0,30	8	26,4	114	71	325
0/-0,12	16,00	0/-0,24	38,00	0,60	0,60	7	32,2	186	116	527
0/-0,12	18,00	0/-0,24	43,00	0,60	0,60	6	36,9	236	148	671
0/-0,12	20,00	0/-0,3	50,00	0,60	1,00	6	43,3	307	192	871
0/-0,12	22,00	0/-0,3	56,00	0,60	1,00	7	47,9	378	236	1075
0/-0,12	25,00	0/-0,3	62,00	0,60	1,00	7	53,1	475	297	1349
0/-0,12	28,00	0/-0,3	69,00	0,60	1,00	6	59,5	592	370	1681
0/-0,15	36,00	0/-0,4	84,00	1,00	1,00	6	71,6	921	576	2616
0/-0,15	40,00	0/-0,4	95,00	1,00	1,00	6	81,4	1159	725	3294
0/-0,15	45,00	0/-0,4	110,00	1,00	1,00	6	95,3	1515	947	4303
0/-0,2	50,00	0/-0,5	121,00	1,00	1,00	5	105,1	1849	1156	5254
0/-0,2	55,00	0/-0,5	136,00	1,00	1,00	7	116,6	2291	1432	6510
0/-0,2	55,00	0/-0,5	146,00	1,00	1,00	6	128,1	2475	1547	7031
0/-0,2	70,00	0/-0,5	162,00	1,00	1,00	6	137,9	3451	2157	9803
0/-0,25	70,00	0/-0,6	186,00	1,00	1,00	7	162,8	4013	2508	11401
0/-0,25	80,00	0/-0,6	206,00	1,00	1,00	8	177,2	5067	3167	14394
0/-0,25	80,00	0/-0,7	228,00	1,10	1,10	6	202,4	5651	3532	16055
0/-0,3	100,00	0/-0,7	262,00	1,10	1,10	7	227,5	8067	5042	22917
0/-0,3	100,00	0/-0,8	284,00	1,10	1,10	8	249,9	8797	5498	24991
0/-0,3	100,00	0/-0,8	310,00	1,10	1,10	8	276,6	9655	6034	27429
0/-0,35	110,00	0/-0,8	338,00	1,10	1,10	7	302,9	11574	7234	32880
0/-0,35	120,00	0/-0,8	360,00	1,10	1,10	6	324,9	13429	8393	38150
0/-0,35	120,00	0/-0,9	384,00	1,10	1,10	7	346,7	14376	8985	40842
0/-0,4	135,00	0/-0,9	390,00	1,10	3,00	4	355,7	16327	10205	46384
0/-0,4	135,00	0/-0,9	420,00	1,10	3,00	3	388,3	17663	11039	50178
0/-0,4	135,00	0/-0,9	440,00	1,10	3,00	3	409,9	18550	11594	52698
0/-0,4	160,00	0/-1	470,00	1,50	4,00	4	429,9	23345	14591	66322
0/-0,4	160,00	0/-1	490,00	1,50	4,00	3	451,7	24400	15250	69319
0/-0,45	160,00	0/-1	510,00	1,50	4,00	3	473,3	25453	15908	72309
0/-0,45	185,00	0/-1	550,00	1,50	4,00	3	505,0	31611	19757	89805
0/-0,45	185,00	0/-1	570,00	1,50	4,00	3	526,7	32831	20519	93269
0/-0,45	195,00	0/-1,1	590,00	2,00	5,00	3	543,3	35782	22363	101652
0/-0,45	195,00	0/-1,1	610,00	2,00	5,00	3	565,0	37065	23166	105299
0/-0,5	205,00	0/-1,1	640,00	2,00	5,00	3	592,1	40878	25549	116131
0/-0,5	215,00	0/-1,1	670,00	2,00	5,00	4	618,3	44877	28048	127492
0/-0,5	230,00	0/-1,1	720,00	2,00	5,00	3	666,6	51604	32252	146602
0/-0,5	260,00	0/-1,2	760,00	3,00	6,00	3	698,3	61324	38328	174217
0/-0,75	260,00	0/-1,2	800,00	3,00	6,00	3	738,3	64753	40471	183958
0/-0,75	275,00	0/-1,2	850,00	3,00	6,00	3	785,4	72789	45493	206786
0/-0,75	280,00	0/-1,2	900,00	3,00	6,00	3	835,3	78639	49149	223406
0/-0,75	300,00	0/-1,3	950,00	3,00	6,00	3	889,0	88867	55542	252462
0/-1	310,00	0/-1,3	1.020,00	3,00	6,00	3	952,5	98791	61744	280656
0/-1	320,00	0/-1,3	1.070,00	3,00	6,00	3	1.002,1	107061	66913	304150
0/-1	340,00	0/-1,3	1.140,00	4,00	7,50	3	1.067,5	121210	75756	344345
0/-1	370,00	0/-1,6	1.200,00	4,00	7,50	3	1.117,2	138619	86637	393803

SPECS | FBT-I

*See p.10 for drawing

Shaft ø	Dimensions											
	d	d tolerance	D	D tolerance	B	B tolerance	C	C tolerance	Dk	r1s	r2s	α	da	Maximum Static Load (kN) C0	Maximum Dynamic load (kN) C	Surface mm2 (=C/220)
FBT-1"	25.400	0/-0.01	41.275	0/-0.011	22.23	0/-0.12	19.05	0/-0.24	38.0	0.30	0.60	6	30.8	216	135	614
FBT-1.25"	31.750	0/-0.012	50.800	0/-0.013	27.76	0/-0.12	23.80	0/-0.3	47.0	0.60	1.00	6	37.9	333	208	947
FBT-1.375"	34.925	0/-0.012	55.563	0/-0.013	30.15	0/-0.12	26.19	0/-0.3	51.0	0.60	1.00	5	41.1	397	248	1128
FBT-1.5"	38.100	0/-0.012	61.913	0/-0.013	33.33	0/-0.12	28.58	0/-0.3	57.0	0.60	1.00	6	46.2	486	304	1381
FBT-1.75"	44.450	0/-0.012	71.438	0/-0.013	38.89	0/-0.12	33.33	0/-0.3	63.9	0.60	1.00	6	52.1	631	395	1793
FBT-2"	50.800	0/-0.015	80.963	0/-0.015	44.45	0/-0.15	38.10	0/-0.4	74.0	0.60	1.00	6	59.2	838	524	2380
FBT-2.25"	57.150	0/-0.015	90.488	0/-0.015	50.01	0/-0.15	42.85	0/-0.4	84.0	0.60	1.00	6	67.5	1071	670	3043
FBT-2.5"	63.500	0/-0.015	100.013	0/-0.015	55.55	0/-0.15	47.63	0/-0.4	92.0	0.60	1.00	6	73.3	1301	813	3696
FBT-2.75"	69.850	0/-0.015	111.125	0/-0.015	61.11	0/-0.15	52.38	0/-0.4	102.0	0.60	1.00	6	81.7	1588	993	4512
FBT-3"	76.200	0/-0.015	120.650	0/-0.015	66.68	0/-0.15	57.15	0/-0.4	111.0	0.60	1.00	6	88.7	1885	1178	5355
FBT-3.25"	82.550	0/-0.020	130.175	0/-0.018	72.24	0/-0.15	61.90	0/-0.4	120.0	0.60	1.00	6	95.8	2207	1379	6269
FBT-3.5"	88.900	0/-0.020	139.700	0/-0.018	77.78	0/-0.15	66.68	0/-0.4	130.0	0.60	1.00	6	104.2	2578	1611	7323
FBT-3.75"	95.250	0/-0.020	149.225	0/-0.018	83.34	0/-0.20	71.43	0/-0.4	138.0	0.60	1.00	6	110.0	2927	1829	8314
FBT-4"	101.600	0/-0.020	158.750	0/-0.025	88.90	0/-0.20	76.20	0/-0.4	148.0	0.60	1.00	6	118.3	3351	2095	9521
FBT-4.5"	114.300	0/-0.020	177.800	0/-0.025	100.00	0/-0.20	85.73	0/-0.4	164.5	1.00	1.10	6	132.5	4181	2613	11878
FBT-4.75"	120.650	0/-0.020	187.325	0/-0.030	105.56	0/-0.20	90.48	0/-0.4	175.0	1.00	1.10	6	139.6	4702	2939	13358
FBT-5"	127.000	0/-0.025	196.850	0/-0.030	111.13	0/-0.20	95.25	0/-0.4	185.0	1.00	1.10	6	147.9	5236	3273	14876
FBT-6"	152.400	0/-0.025	222.250	0/-0.030	120.65	0/-0.20	104.78	0/-0.4	209.0	1.00	1.10	5	170.7	6536	4085	18567

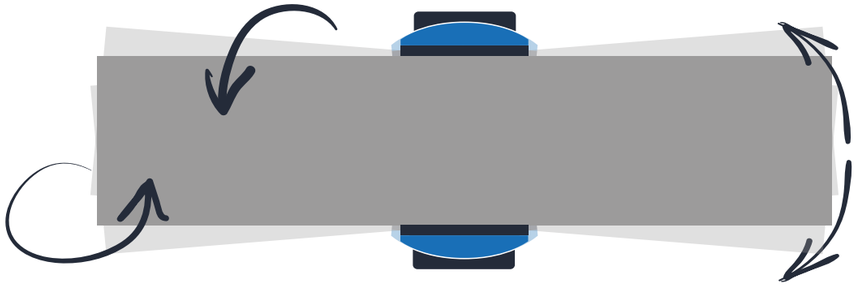

Multidirectional, self-aligning movements

SPECS | FBT-HD

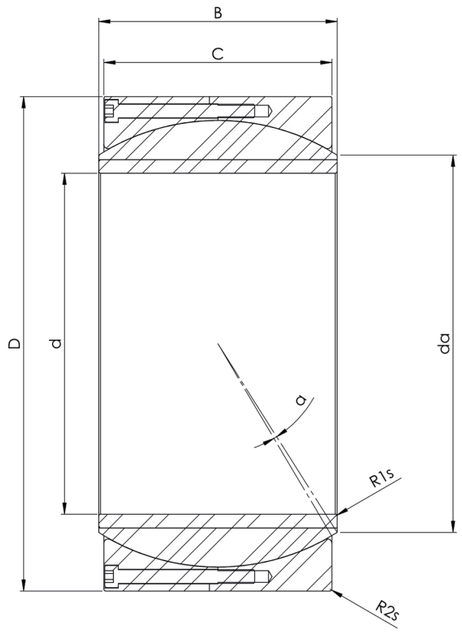

	Shaft ø	Dimensions			
	d	d tolerance	D	D tolerance	B
FBT-100HD	100	0/-0,02	150,00	0/-0,018	71,00
FBT-110HD	110	0/-0,02	160,00	0/-0,025	78,00
FBT-120HD	120	0/-0,02	180,00	0/-0,025	85,00
FBT-140HD	140	0/-0,025	210,00	0/-0,03	100,00
FBT-160HD	160	0/-0,025	230,00	0/-0,03	115,00
FBT-180HD	180	0/-0,025	260,00	0/-0,035	128,00
FBT-200HD	200	0/-0,03	290,00	0/-0,035	140,00
FBT-220HD	220	0/-0,03	320,00	0/-0,04	155,00
FBT-240HD	240	0/-0,03	340,00	0/-0,04	170,00
FBT-260HD	260	0/-0,035	370,00	0/-0,04	185,00
FBT-280HD	280	0/-0,035	400,00	0/-0,04	200,00
FBT-300HD	300	0/-0,035	430,00	0/-0,045	212,00
FBT-320HD	320	0/-0,04	460,00	0/-0,045	230,00
FBT-340HD	340	0/-0,04	480,00	0/-0,045	243,00
FBT-360HD	360	0/-0,04	520,00	0/-0,045	258,00
FBT-380HD	380	0/-0,04	540,00	0/-0,05	272,00
FBT-400HD	400	0/-0,04	580,00	0/-0,05	280,00
FBT-420HD	420	0/-0,045	600,00	0/-0,05	300,00
FBT-440HD	440	0/-0,045	630,00	0/-0,05	315,00
FBT-460HD	460	0/-0,045	650,00	0/-0,05	325,00
FBT-480HD	480	0/-0,045	680,00	0/-0,075	340,00
FBT-500HD	500	0/-0,045	710,00	0/-0,075	355,00
FBT-530HD	530	0/-0,05	750,00	0/-0,075	375,00
FBT-560HD	560	0/-0,05	800,00	0/-0,075	400,00
FBT-600HD	600	0/-0,05	850,00	0/-0,075	425,00
FBT-630HD	630	0/-0,05	900,00	0/-0,1	450,00
FBT-670HD	670	0/-0,075	950,00	0/-0,1	475,00
FBT-710HD	710	0/-0,075	1.000,00	0/-0,1	500,00
FBT-750HD	750	0/-0,075	1.060,00	0/-0,1	530,00
FBT-800HD	800	0/-0,075	1.120,00	0/-0,125	565,00
FBT-850HD	850	0/-0,1	1.220,00	0/-0,125	600,00
FBT-900HD	900	0/-0,1	1.250,00	0/-0,125	635,00
FBT-950HD	950	0/-0,1	1.360,00	0/-0,125	670,00
FBT-1000HD	1000	0/-0,1	1.450,00	0/-0,16	710,00

								Maximum Static Load (kN)	Maximum Dynamic load (kN)	
B tolerance	C	C tolerance	Dk	r1s	r2s	α	da	C0	C	Surface mm2 (=C/220)
0/-0,2	67,00	0/-0,5	134,00	1,00	1,00	2	113,6	2681	1675	7615
0/-0,2	74,00	0/-0,5	146,00	1,00	1,00	2	123,4	3219	2012	9144
0/-0,2	80,00	0/-0,5	162,00	1,00	1,00	2	137,9	3877	2423	11013
0/-0,25	95,00	0/-0,6	186,00	1,00	1,00	2	156,8	5258	3286	14937
0/-0,25	109,00	0/-0,6	210,00	1,00	1,00	2	175,7	6793	4246	19298
0/-0,25	122,00	0/-0,7	236,00	1,10	1,10	2	198,3	8550	5344	24290
0/-0,3	134,00	0/-0,7	262,00	1,10	1,10	2	221,5	10444	6528	29671
0/-0,3	148,00	0/-0,8	286,00	1,10	1,10	2	240,4	12568	7855	35704
0/-0,3	162,00	0/-0,8	310,00	1,10	1,10	2	259,2	14886	9304	42290
0/-0,35	175,00	0/-0,8	338,00	1,10	1,10	2	282,9	17561	10975	49888
0/-0,35	190,00	0/-0,8	364,00	1,10	1,10	2	304,1	20504	12815	58250
0/-0,35	200,00	0/-0,9	338,00	1,10	1,10	2	325,0	19535	12210	55498
0/-0,4	218,00	0/-0,9	414,00	1,10	3,00	2	344,2	26716	16698	75899
0/-0,4	230,00	0/-0,9	440,00	1,10	3,00	2	366,8	29996	18747	85215
0/-0,4	243,00	0/-0,9	470,00	1,10	3,00	2	392,9	33915	21197	96350
0/-0,4	258,00	0/-1	494,00	1,50	4,00	2	412,4	37783	23614	107337
0/-0,4	265,00	0/-1	518,00	1,50	4,00	2	435,8	40835	25522	116008
0/-0,45	280,00	0/-1	546,00	1,50	4,00	2	456,2	45460	28413	129149
0/-0,45	300,00	0/-1	576,00	1,50	4,00	2	482,2	51250	32031	145596
0/-0,45	308,00	0/-1	596,00	1,50	4,00	2	499,6	54516	34072	154875
0/-0,45	320,00	0/-1,1	626,00	2,00	5,00	2	525,6	59598	37249	169313
0/-0,45	335,00	0/-1,1	656,00	2,00	5,00	2	551,6	65393	40870	185775
0/-0,5	355,00	0/-1,1	690,00	2,00	5,00	2	579,2	72799	45499	206815
0/-0,5	380,00	0/-1,1	730,00	2,00	5,00	2	610,7	82280	51425	233751
0/-0,5	400,00	0/-1,1	780,00	2,00	5,00	2	654,0	92776	57985	263569
0/-0,5	425,00	0/-1,2	820,00	3,00	6,00	2	685,5	103446	64654	293881
0/-0,75	450,00	0/-1,2	870,00	3,00	6,00	2	728,9	116250	72656	330255
0/-0,75	475,00	0/-1,2	920,00	3,00	6,00	2	772,3	129800	81125	368750
0/-0,75	500,00	0/-1,2	970,00	3,00	6,00	2	812,4	144096	90060	409365
0/-0,75	530,00	0/-1,3	1.040,00	3,00	6,00	2	873,1	164073	102545	466115
0/-1	565,00	0/-1,3	1.120,00	3,00	6,00	2	945,7	188669	117918	535991
0/-1	600,00	0/-1,3	1.160,00	3,00	6,00	2	970,8	206666	129166	587120
0/-1	635,00	0/-1,3	1.250,00	4,00	7,50	2	1.055,3	236392	147745	671569
0/-1	670,00	0/-1,6	1.330,00	4,00	7,50	2	1.124,6	265739	166087	754942

SPECS | FBT-FW

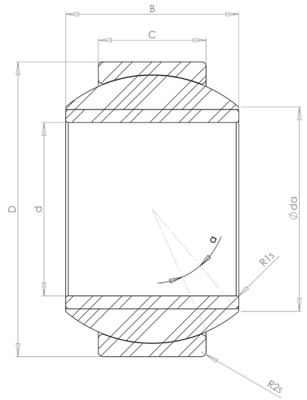

Shaft ø	Dimensions			
d	d tolerance	D	D tolerance	B
FBT-20FW	20	0/-0,01	42,00	0/-0,011	25,00
FBT-25FW	25	0/-0,01	47,00	0/-0,011	28,00
FBT-30FW	30	0/-0,01	55,00	0/-0,013	32,00
FBT-30FW	35	0/-0,012	62,00	0/-0,013	35,00
FBT-40FW	40	0/-0,012	68,00	0/-0,013	40,00
FBT-45FW	45	0/-0,012	75,00	0/-0,013	43,00
FBT-50FW	50	0/-0,012	90,00	0/-0,015	56,00
FBT-60FW	60	0/-0,015	105,00	0/-0,015	63,00
FBT-70FW	70	0/-0,015	120,00	0/-0,015	70,00
FBT-80FW	80	0/-0,015	130,00	0/-0,018	75,00
FBT-90FW	90	0/-0,02	150,00	0/-0,018	85,00
FBT-100FW	100	0/-0,02	160,00	0/-0,025	85,00
FBT-110FW	110	0/-0,02	180,00	0/-0,025	100,00
FBT-120FW	120	0/-0,02	210,00	0/-0,03	115,00
FBT-140FW	140	0/-0,025	230,00	0/-0,03	130,00
FBT-160FW	160	0/-0,025	260,00	0/-0,035	135,00
FBT-180FW	180	0/-0,025	290,00	0/-0,035	155,00
FBT-200FW	200	0/-0,03	320,00	0/-0,04	165,00
FBT-220FW	220	0/-0,03	340,00	0/-0,04	175,00
FBT-240FW	240	0/-0,03	370,00	0/-0,04	190,00
FBT-260FW	260	0/-0,035	400,00	0/-0,04	205,00
FBT-280FW	280	0/-0,035	430,00	0/-0,045	210,00

								Maximum Static Load	Maximum Dynamic load	
B tolerance	C	C tolerance	Dk	r1s	r2s	α	da	(kN)	(kN)	Surface mm2
								C0	C	(=C/220)
0/-0,12	16,00	0/-0,24	38,00	0,60	0,60	16	25,8	266	167	757
0/-0,12	18,00	0/-0,24	43,00	0,60	0,60	16	32,8	339	212	963
0/-0,12	20,00	0/-0,3	50,00	0,60	1,00	16	38,0	453	283	1.286
0/-0,12	22,00	0/-0,3	56,00	0,60	1,00	16	43,7	558	349	1.586
0/-0,12	25,00	0/-0,3	62,00	0,60	1,00	16	47,4	700	437	1.989
0/-0,12	28,00	0/-0,3	69,00	0,60	1,00	15	54,0	846	529	2.403
0/-0,15	36,00	0/-0,4	84,00	0,60	1,00	16	62,6	1.314	821	3.732
0/-0,15	40,00	0/-0,4	95,00	1,00	1,00	17	71,1	1.674	1.046	4.757
0/-0,15	45,00	0/-0,4	110,00	1,00	1,00	15	84,9	2.182	1.364	6.200
0/-0,2	50,00	0/-0,5	121,00	1,00	1,00	14	95,0	2.591	1.620	7.362
0/-0,2	55,00	0/-0,5	136,00	1,00	1,00	15	106,2	3.293	2.058	9.356
0/-0,2	55,00	0/-0,5	146,00	1,00	1,00	13	118,7	3.600	2.250	10.227
0/-0,2	70,00	0/-0,5	162,00	1,00	1,00	13	127,5	4.631	2.895	13.157
0/-0,2	70,00	0/-0,6	186,00	1,00	1,00	16	146,2	6.112	3.820	17.364
0/-0,25	80,00	0/-0,6	206,00	1,00	1,00	16	159,8	7.609	4.755	21.615
0/-0,25	80,00	0/-0,7	228,00	1,00	1,10	16	183,7	8.894	5.558	25.266
0/-0,3	100,00	0/-0,7	262,00	1,10	1,10	14	211,2	11.736	7.335	33.341
0/-0,3	100,00	0/-0,8	284,00	1,10	1,10	15	231,2	13.600	8.500	38.636
0/-0,3	100,00	0/-0,8	310,00	1,10	1,10	16	255,9	15.845	9.903	45.013
0/-0,35	110,00	0/-0,8	338,00	1,10	1,10	15	279,5	18.773	11.733	53.333
0/-0,35	120,00	0/-0,8	360,00	1,10	1,10	15	295,9	21.515	13.447	61.121
0/-0,35	120,00	0/-0,9	384,00	1,10	1,10	15	321,5	23.704	14.815	67.342

SPECS | FBT-HO

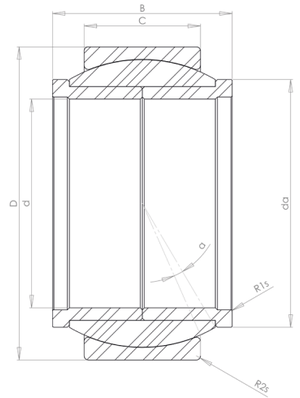

Shaft ø	Dimensions			
d	d tolerance	D	D tolerance	B
FBT-20HO	20	0/-0,01	35,00	0/-0,011	24,00
FBT-25HO	25	0/-0,01	42,00	0/-0,011	29,00
FBT-30HO	30	0/-0,01	47,00	0/-0,011	30,00
FBT-35HO	35	0/-0,012	55,00	0/-0,013	35,00
FBT-40HO	40	0/-0,012	62,00	0/-0,013	38,00
FBT-45HO	45	0/-0,012	68,00	0/-0,013	40,00
FBT-50HO	50	0/-0,012	75,00	0/-0,013	43,00
FBT-60HO	60	0/-0,015	90,00	0/-0,015	54,00
FBT-70HO	70	0/-0,015	105,00	0/-0,015	65,00
FBT-80HO	80	0/-0,015	120,00	0/-0,015	74,00

								Maximum Static Load	Maximum Dynamic load	
B tolerance	C	C tolerance	Dk	r1s	r2s	α	da	(kN)	(kN)	Surface mm2
								C0	C	(=C/220)
+/-0,2	12,00	0/-0,24	31,00	0,30	0	8,0	26	114	71	325
+/-0,3	16,00	0/-0,24	38,00	0,60	1	7,0	32	186	116	527
+/-0,3	18,00	0/-0,24	43,00	0,60	1	6,0	37	236	148	671
+/-0,3	20,00	0/-0,3	50,00	0,60	1	6,0	43	307	192	871
+/-0,3	22,00	0/-0,3	56,00	0,60	1	7,0	48	378	236	1075
+/-0,3	25,00	0/-0,3	62,00	0,60	1	7,0	53	475	297	1349
+/-0,3	28,00	0/-0,3	69,00	0,60	1	6,0	59	592	370	1681
+/-0,3	36,00	0/-0,4	84,00	1,00	1	6,0	72	921	576	2616
+/-0,3	40,00	0/-0,4	95,00	1,00	1	6,0	81	1159	725	3294
+/-0,3	45,00	0/-0,4	110,00	1,00	1	6,0	95	1515	947	4303

Custom | Fero Ball®

Unlimited

Custom made solutions in every possible way.
Together we'll find the right design for your application.
Manufactured in our own production facility.

Feroball® allows you to customize your designs, making it the ideal solution for your applications! Experience this for yourself and talk to us about all the options available for your application.

+31(0)85 487 4800

FBA

The Feroball® FBA-bearing is a two-piece design and is completely manufactured out of composite material, making it the ideal solution for applications that operate in highly corrosive environments. Although Feroball® bearings have been developed specifically for low stick-slip values, Feroball® FBA-bearings have higher frictional values than the standard FBT-series.

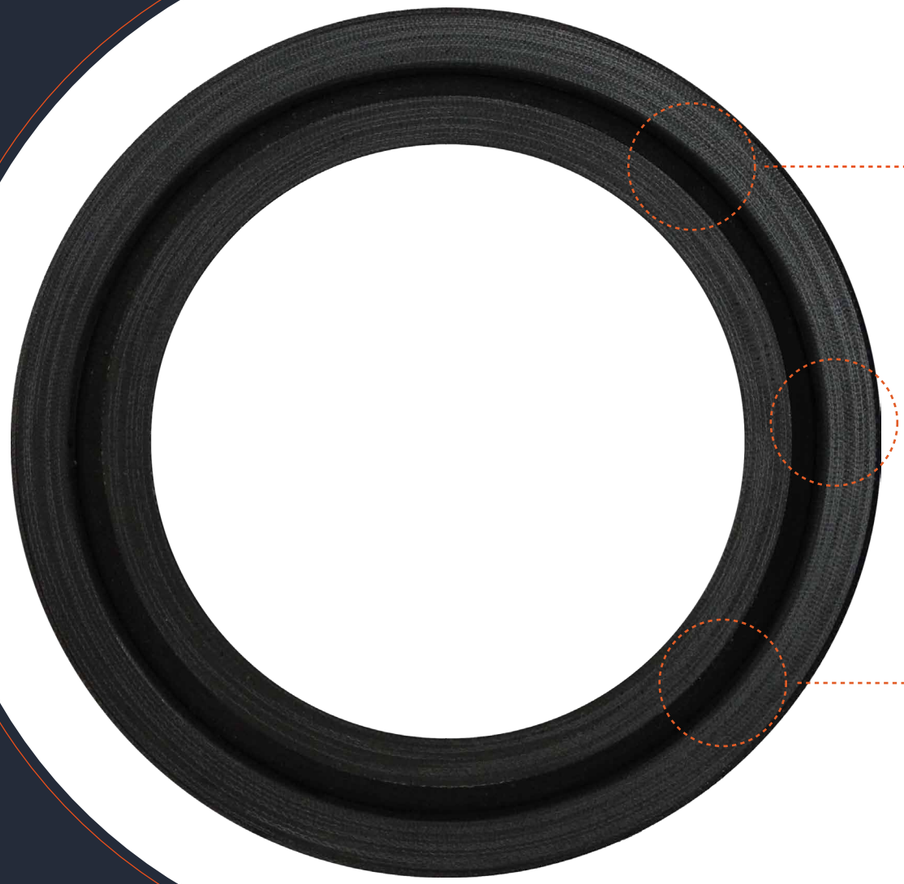

Insulating design

Full composite Feroform PR18

Light-weight

No usage of metal components

Use in both dry and wet conditions

SPECS | FBA

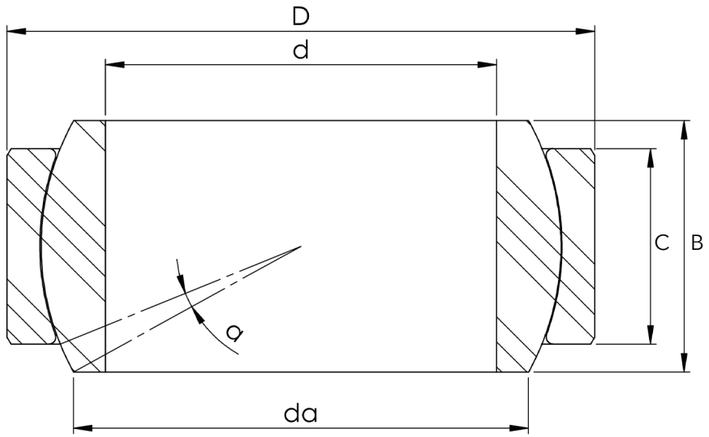

	Shaft ø
	d
FBA-20	20
FBA-25	25
FBA-30	30
FBA-35	35
FBA-40	40
FBA-45	45
FBA-50	50
FBA-60	60
FBA-70	70
FBA-80	80
FBA-90	90
FBA-100	100
FBA-110	110
FBA-120	120
FBA-140	140
FBA-160	160

Dimensions							
D	B	B tolerance	C	C tolerance	Dk	α	da
35,00	16,00	+/-0,05	12,00	+/-0,05	31,00	8	26,6
42,00	20,00	+/-0,05	16,00	+/-0,05	38,00	7	32,3
47,00	22,00	+/-0,05	18,00	+/-0,05	43,00	6	37,0
55,00	25,00	+/-0,05	20,00	+/-0,05	50,00	6	43,3
62,00	29,00	+/-0,05	22,00	+/-0,05	56,00	7	47,9
68,00	32,00	+/-0,05	25,00	+/-0,05	62,00	7	53,1
75,00	35,00	+/-0,05	28,00	+/-0,05	69,00	6	59,5
90,00	44,00	+/-0,05	36,00	+/-0,05	84,00	6	71,6
105,00	49,00	+/-0,05	40,00	+/-0,05	95,00	6	81,4
120,00	55,00	+/-0,05	45,00	+/-0,05	110,00	6	95,3
130,00	60,00	+/-0,05	50,00	+/-0,05	121,00	5	105,1
150,00	70,00	+/-0,05	55,00	+/-0,05	136,00	7	116,6
160,00	70,00	+/-0,05	55,00	+/-0,05	146,00	6	128,1
180,00	85,00	+/-0,05	70,00	+/-0,05	162,00	6	137,9
210,00	90,00	+/-0,05	70,00	+/-0,05	186,00	7	162,8
230,00	105,00	+/-0,05	80,00	+/-0,05	206,00	8	177,2

Maximum Static Load (kN)	Maximum Dynamic load (kN)	Surface mm2
C0	C	
93	31	325
150	51	527
191	65	671
248	84	871
306	103	1.075
384	130	1.349
479	162	1.681
745	252	2.616
938	317	3.294
1.226	414	4.303
1.497	506	5.254
1.855	627	6.510
2.003	677	7.031
2.793	944	9.803
3.248	1.097	11.401
4.101	1.385	14.394

Compared to cylindrical bushings, Feroball® bearings prevent edge stress and overloading

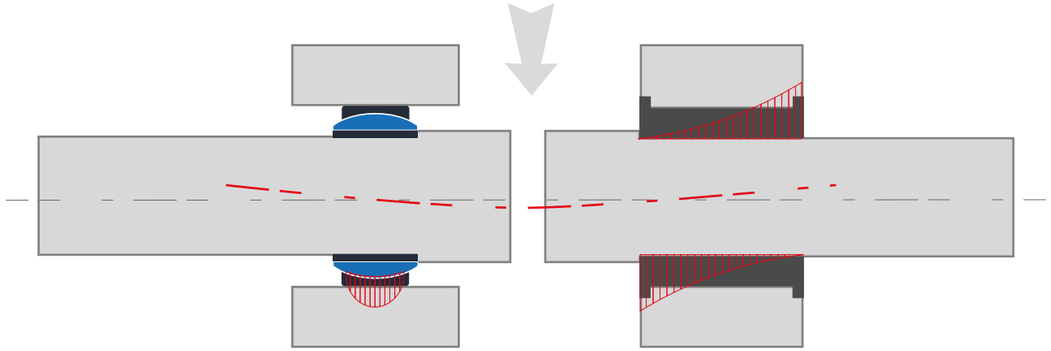

Bridge and Sluice Applications

FBS

The use of composite material Feroform PR18 for both the inner- and outer- ring in combination with a ball, manufactured from stainless steel 316L (1.4404), gives the bearing superior corrosion resistance and insulation properties. Thus the FBS-series is the ultimate solution to prevent stress corrosion between different materials for shaft and housing.

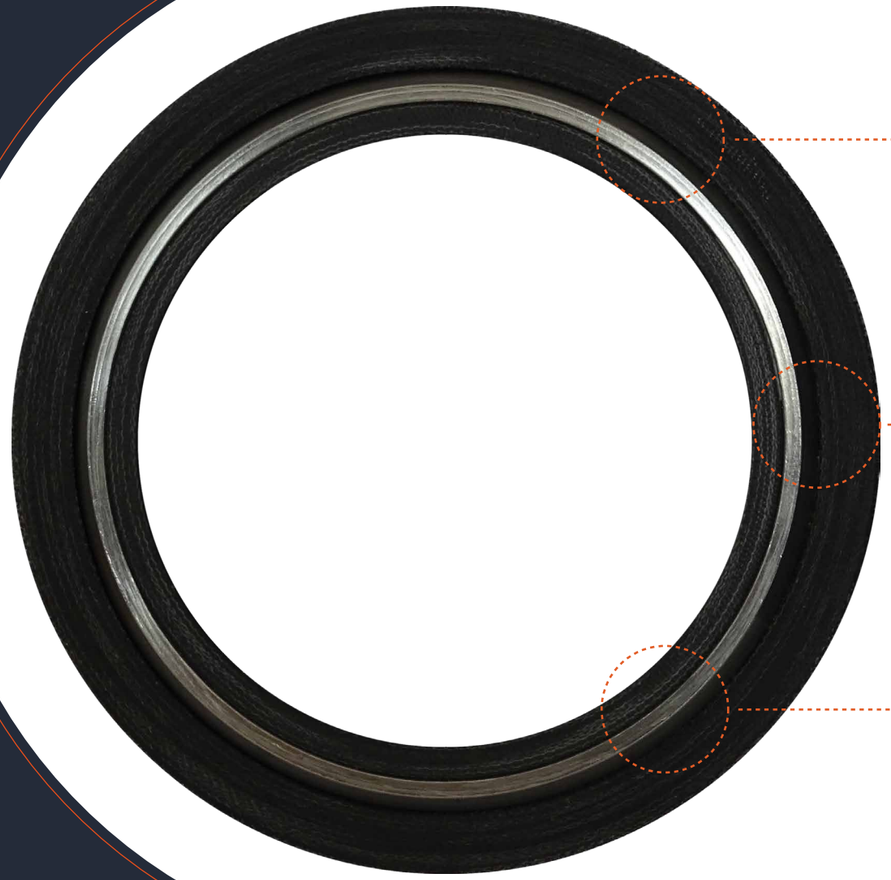

Self lubricating

Stainless steel and Feroform PR18 design

Insulating properties

Composite Feroform PR18

Use in both dry and wet conditions

SPECS | FBS

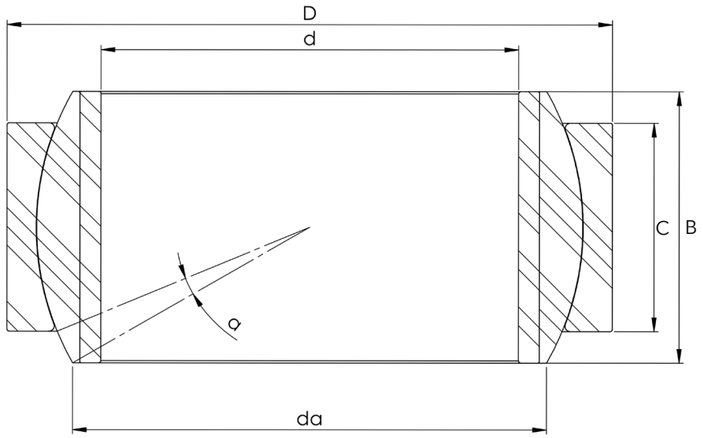

Shaft ø	Dimensions								Maximum Static Load (kN)	Maximum Dynamic load (kN)	Surface mm2
d	D	B	B tolerance	C	C tolerance	Dk	α	da	C0	C	(=C/220)
FBS-20	35,00	16,00	+/-0,05	12,00	+/-0,05	31,00	8	26,4	103	64	325
20	42,00	20,00	+/-0,05	16,00	+/-0,05	38,00	7	32,2	167	104	527
FBS-25	47,00	22,00	+/-0,05	18,00	+/-0,05	43,00	6	36,9	213	133	671
25	55,00	25,00	+/-0,05	20,00	+/-0,05	50,00	6	43,3	276	172	871
FBS-30	62,00	28,00	+/-0,05	22,00	+/-0,05	56,00	7	47,9	341	213	1.075
30	68,00	32,00	+/-0,05	25,00	+/-0,05	62,00	7	53,1	427	267	1.349
FBS-35	75,00	35,00	+/-0,05	28,00	+/-0,05	69,00	6	59,5	532	333	1.681
35	90,00	44,00	+/-0,05	36,00	+/-0,05	84,00	6	71,6	829	518	2.616
FBS-40	105,00	49,00	+/-0,05	40,00	+/-0,05	95,00	6	81,4	1.044	652	3.294
40	120,00	55,00	+/-0,05	45,00	+/-0,05	110,00	6	95,3	1.363	852	4.303
FBS-45	130,00	60,00	+/-0,05	50,00	+/-0,05	121,00	5	105,1	1.665	1.040	5.254
45	150,00	70,00	+/-0,05	55,00	+/-0,05	136,00	7	116,6	2.062	1.289	6.510
FBS-50	160,00	70,00	+/-0,05	55,00	+/-0,05	146,00	6	128,1	2.227	1.392	7.031
50	180,00	85,00	+/-0,05	70,00	+/-0,05	162,00	6	137,9	3.106	1.941	9.803
FBS-60	210,00	90,00	+/-0,05	70,00	+/-0,05	186,00	7	162,8	3.612	2.257	11.401
60	230,00	105,00	+/-0,05	80,00	+/-0,05	206,00	8	177,2	4.560	2.850	14.394
FBS-70	260,00	105,00	+/-0,05	80,00	+/-0,05	228,00	6	202,4	5.086	3.179	16.055
70	290,00	130,00	+/-0,05	100,00	+/-0,05	262,00	7	227,5	7.260	4.537	22.917
FBS-80	320,00	135,00	+/-0,05	100,00	+/-0,05	284,00	8	249,9	7.917	4.948	24.991
80											
FBS-90											
90											
FBS-100											
100											
FBS-110											
110											
FBS-120											
120											
FBS-140											
140											
FBS-160											
160											
FBS-180											
180											
FBS-200											
200											
FBS-220											
220											

Shaft deflection does not have a negative effect on bearing life-cycle performance, the shaft or housing.

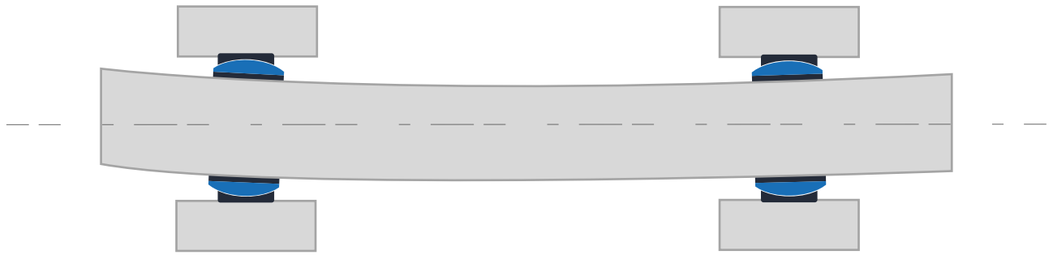

| Hydraulics

FBX

The outer ring of the Feroball® FBX-bearing is manufactured from composite material Feroform PR18 and the steel ball from stainless steel 316L (1.4404). This combination of applied materials guarantees superior corrosion resistance. Although Feroball® bearings have been developed specifically for their low stick-slip values, Feroball® FBX-bearings have higher frictional values than the standard FBT-series.

Extra axial forces

One-piece ball design

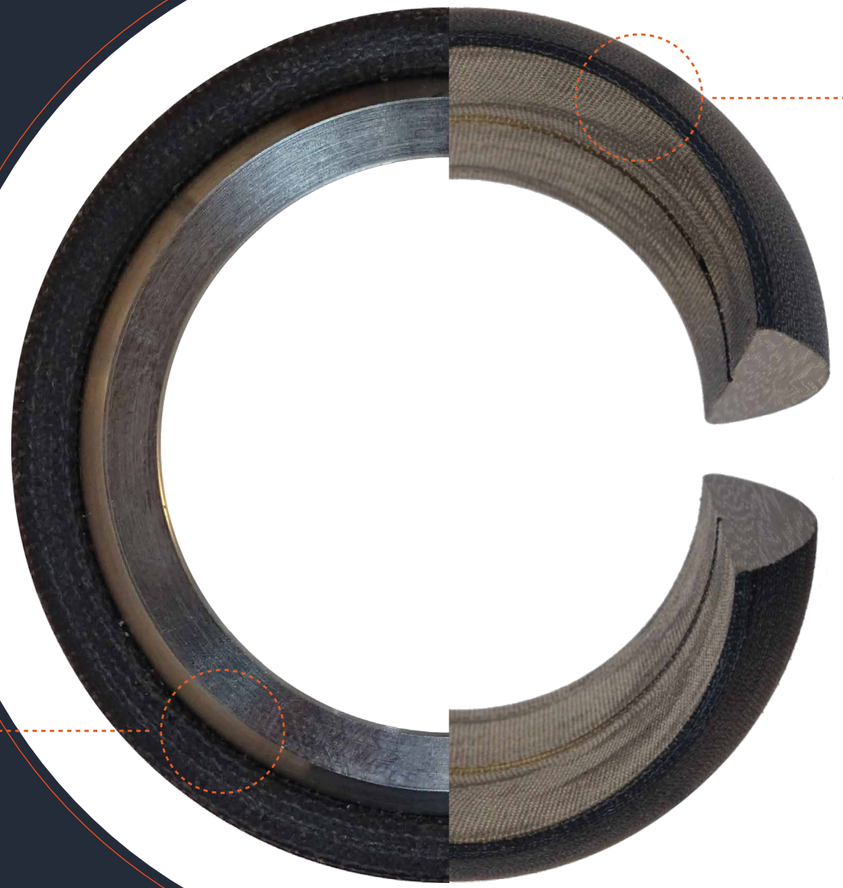

Seamlessly fitted design

FBK

The Feroball® FBK-series share a characteristic design with the fully composite FBA-series. Although the FBK- bearings are designed specifically for applications with a spherical housing design, the bearings are split prior to turning and therefore fit seamlessly in the housing. The Feroball® FBK-bearing is manufactured from the composite material Railko NF22 for shafts ≤ Ø20 mm and composite material Feroform PR18 for shafts ≥ Ø25 mm.

SPECS | FBX

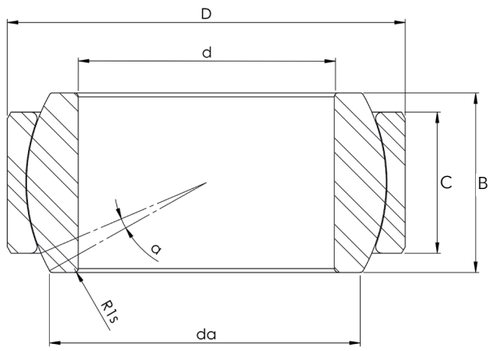

Shaft ø	Dimensions												Maximum Static Load (kN)	Maximum Dynamic load (kN)	
	d	d tolerance	D	B	B tolerance	C	C tolerance	Dk	r1s	α	da		C0	C	Surface mm2
FBX-20	20	0/-0,01	35,00	16	+/-0,05	12	+/-0,05	31	0,3	8	26		93	31	325
FBX-25	25	0/-0,01	42,00	20	+/-0,05	16	+/-0,05	38	0,6	7	32		158	99	527
FBX-30	30	0/-0,01	47,00	22	+/-0,05	18	+/-0,05	43	0,6	6	37		201	126	671
FBX-35	35	0/-0,012	55,00	25	+/-0,05	20	+/-0,05	50	0,6	6	43		261	163	871
FBX-40	40	0/-0,012	62,00	29	+/-0,05	22	+/-0,05	56	0,6	7	48		322	201	1.075
FBX-45	45	0/-0,012	68,00	32	+/-0,05	25	+/-0,05	62	0,6	7	53		404	252	1.349
FBX-50	50	0/-0,012	75,00	35	+/-0,05	28	+/-0,05	69	0,6	6	59		503	314	1.681
FBX-60	60	0/-0,015	90,00	44	+/-0,05	36	+/-0,05	84	1,0	6	72		783	489	2.616
FBX-70	70	0/-0,015	105,00	49	+/-0,05	40	+/-0,05	95	1,0	6	81		986	616	3.294
FBX-80	80	0/-0,015	120,00	55	+/-0,05	45	+/-0,05	110	1,0	6	95		1.287	805	4.303
FBX-90	90	0/-0,02	130,00	60	+/-0,05	50	+/-0,05	121	1,0	5	105		1.572	983	5.254
FBX-100	100	0/-0,02	150,00	70	+/-0,05	55	+/-0,05	136	1	7	117		1.948	1.217	6.510
FBX-110	110	0/-0,02	160,00	70	+/-0,05	55	+/-0,05	146	1,0	6	128		2.104	1.315	7.031
FBX-120	120	0/-0,02	180,00	85	+/-0,05	70	+/-0,05	162	1,0	6	138		2.933	1.833	9.803
FBX-140	140	0/-0,025	210,00	90	+/-0,05	70	+/-0,05	186	1,0	7	163		3.411	2.132	11.401
FBX-160	160	0/-0,025	230,00	105	+/-0,05	80	+/-0,05	206	1,0	8	177		4.307	2.692	14.394
FBX-180	180	0/-0,025	260,00	105	+/-0,05	80	+/-0,05	228	1,1	6	202		4.804	3.002	16.055
FBX-200	200	0/-0,03	290,00	130	+/-0,05	100	+/-0,05	262	1,1	7	227		6.857	4.285	22.917

Shaft ø	Dimensions							Maximum Static Load (kN)	Maximum Dynamic load (kN)	
	d	B	B tolerance	dk	r	a	b	dk C9	C0	C	Ae
FBK-16	16	16,00	+/-0,05	28	14,00	4	14,00	28	70	20	365,7
FBK-20	20	20,00	+/-0,05	33	16,50	4	18,00	33	105	30	545,9
FBK-25	25	26,00	+/-0,05	44	22,00	6	22,00	44	234	79	903,2
FBK-32	32	26,00	+/-0,05	48	24,00	5	22,00	48	258	87	997,3
FBK-35	35	32,00	+/-0,05	55	27,50	5	26,00	55	348	118	1345,1
FBK-40	40	32,00	+/-0,05	60	30,00	4	28,00	60	410	139	1582,9
FBK-50	50	50,00	+/-0,05	75	37,50	5	45,00	75	787	266	3037,5
FBK-60	60	60,00	+/-0,05	90	45,00	8	50,00	90	1.067	361	4120,8
FBK-70	70	65,00	+/-0,05	100	50,00	3	60,00	100	1.399	473	5400,0
FBK-80	80	70,00	+/-0,05	110	55,00	6	60,00	110	1.571	531	6065,9
FBK-90	90	80,00	+/-0,05	125	62,50	5	70,00	125	2.072	700	7999,7
FBK-100	100	90,00	+/-0,05	140	70,00	5	80,00	140	2.641	892	10195,7
FBK-110	110	100,00	+/-0,05	155	77,50	4	90,00	155	3.277	1.107	12653,7
FBK-125	125	100,00	+/-0,05	166	83,00	4	90,00	166	3.560	1.203	13746,8
FBK-140	140	125,00	+/-0,05	194	97,00	5	110,00	194	5.040	1.703	19459,0
FBK-150	150	140,00	+/-0,05	210	105	3	130,00	210	6.312	2.132	24370,1
FBK-160	160	150,00	+/-0,05	225	112,5	3	140,00	225	7.273	2.457	28079,7
FBK-180	180	160,00	+/-0,05	250	125	3	150,00	250	8.741	2.953	33750,0
FBK-200	200	190,00	+/-0,05	290	145	2	180,00	290	12.060	4.074	46563,9

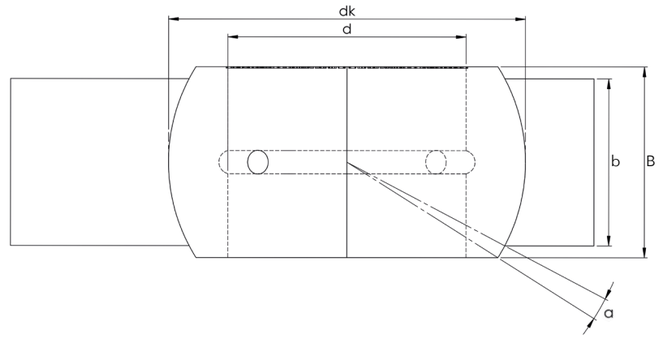

SPECS | FBK

www.feroball.com | info@feroball.com +31(0)85 487 4800

Gildenstraat 11B | 3861 RG Nijkerk

English edition © July 2019

Feroball® is a registered trademark of Kühne Industrie B.V. and may only be used with the explicit permission of Kühne Industrie B.V
No part of this publication, including all text, drawings, pictures and logo's, may be reproduced, stored in a retrieval system, or transmitted, in any form or by any means – electronic, mechanical, photocopying, recording or otherwise – without the prior permission of the publisher.

Although the utmost care has been taken with this publication, errors and omissions cannot be entirely excluded. Therefore accepts no liability, not even for direct or indirect damage, occurring due to or in relation with the use of the content of this publication. No rights can be derived from the information provided in this booklet.

Copyright – All rights reserved - Kühne Industrie B.V. 2019.

www.feroball.com